Mx1100 UMI Serial BTR
Installation & User's Manual

For Sanyo Denki 2400 Series Tape Readers

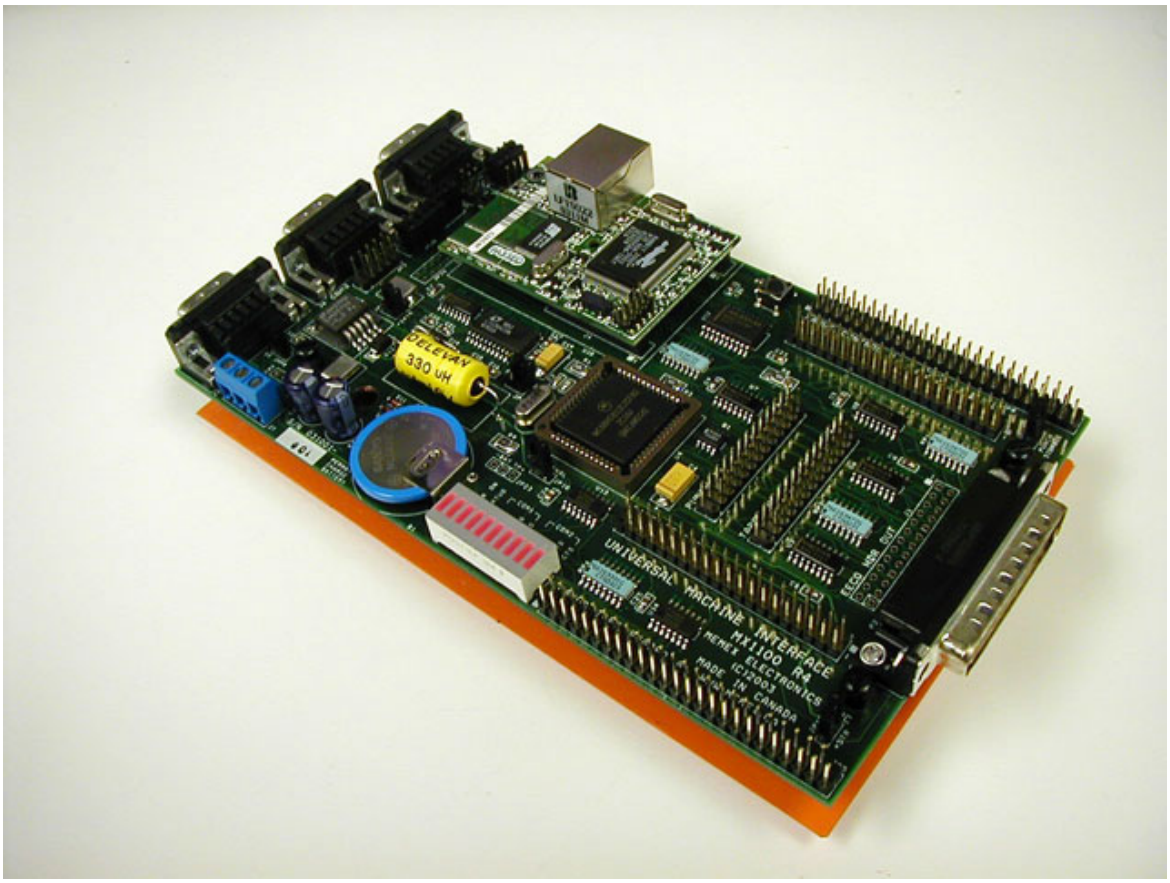

Copyright © 2011 All rights reserved.

Memex Automation Inc.
200 – 3425 Harvester Rd., Burlington, Ontario
Canada L7N 3N1

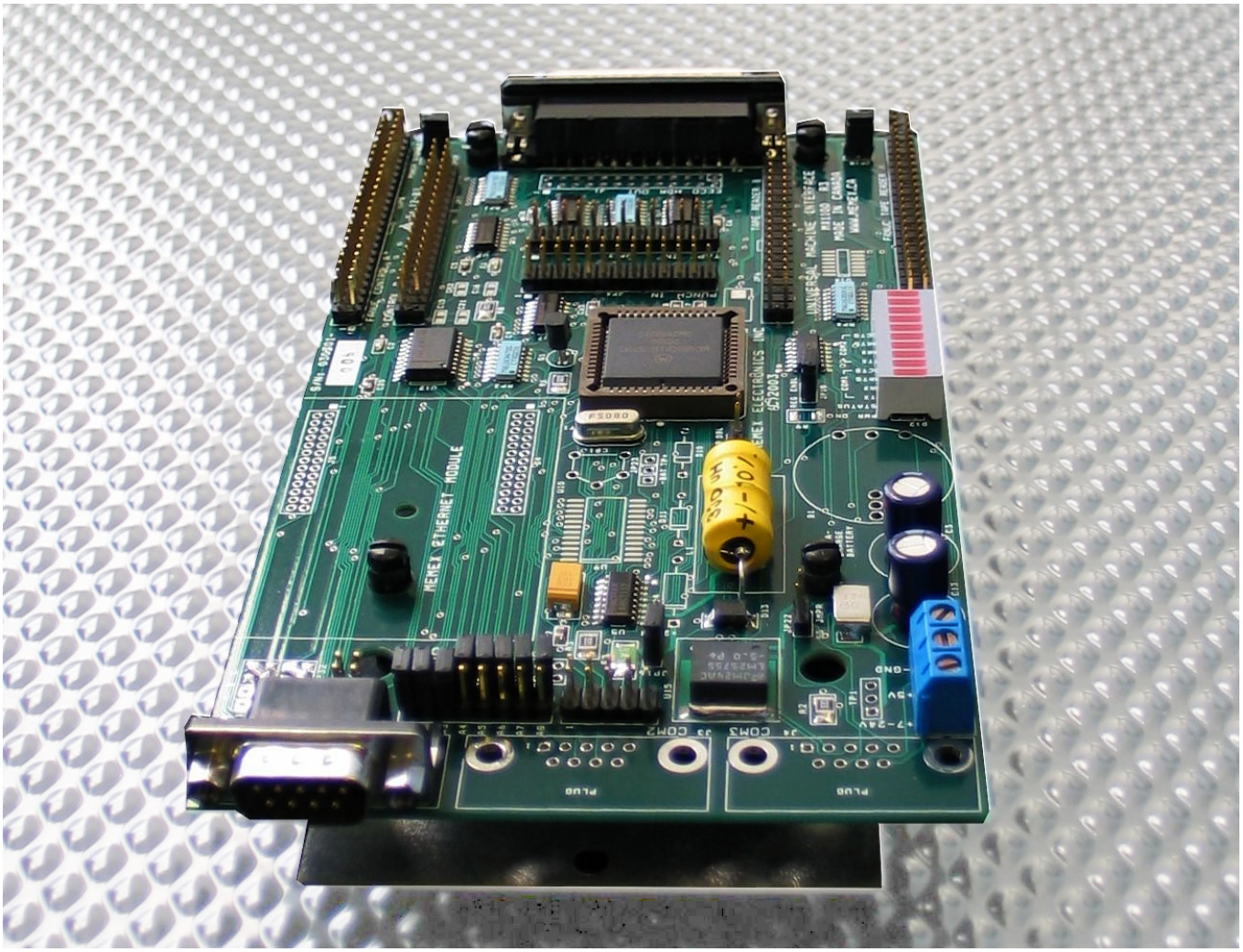

Mx1100 UMI Serial Fanuc BTR

Table of Contents

Introduction 5
About this Manual 5
The History of the BTR 5
Installation Instructions 7
Package Contents 7
Before You Begin 7
Installing the Mx1100 UMI BTR 8
Operating your Mx1100 UMI BTR 12
Helpful hints 12
BTR Configuration for Sanyo Denki Tape Reader 12
Layout of the Mx1100 UMI Serial BTR 13
Reference 13
General Troubleshooting 13
Memex Technical Support & Service 17
Notes 18
Glossary 20
Appendix A: Configuration & Settings 23
Mx1100 UMI BTR Serial Configuration 23
Appendix B: ASCII Table 26
Memex Automation Inc. 28
Thank you for choosing Memex for your 28
Manufacturing Connectivity Solutions 28

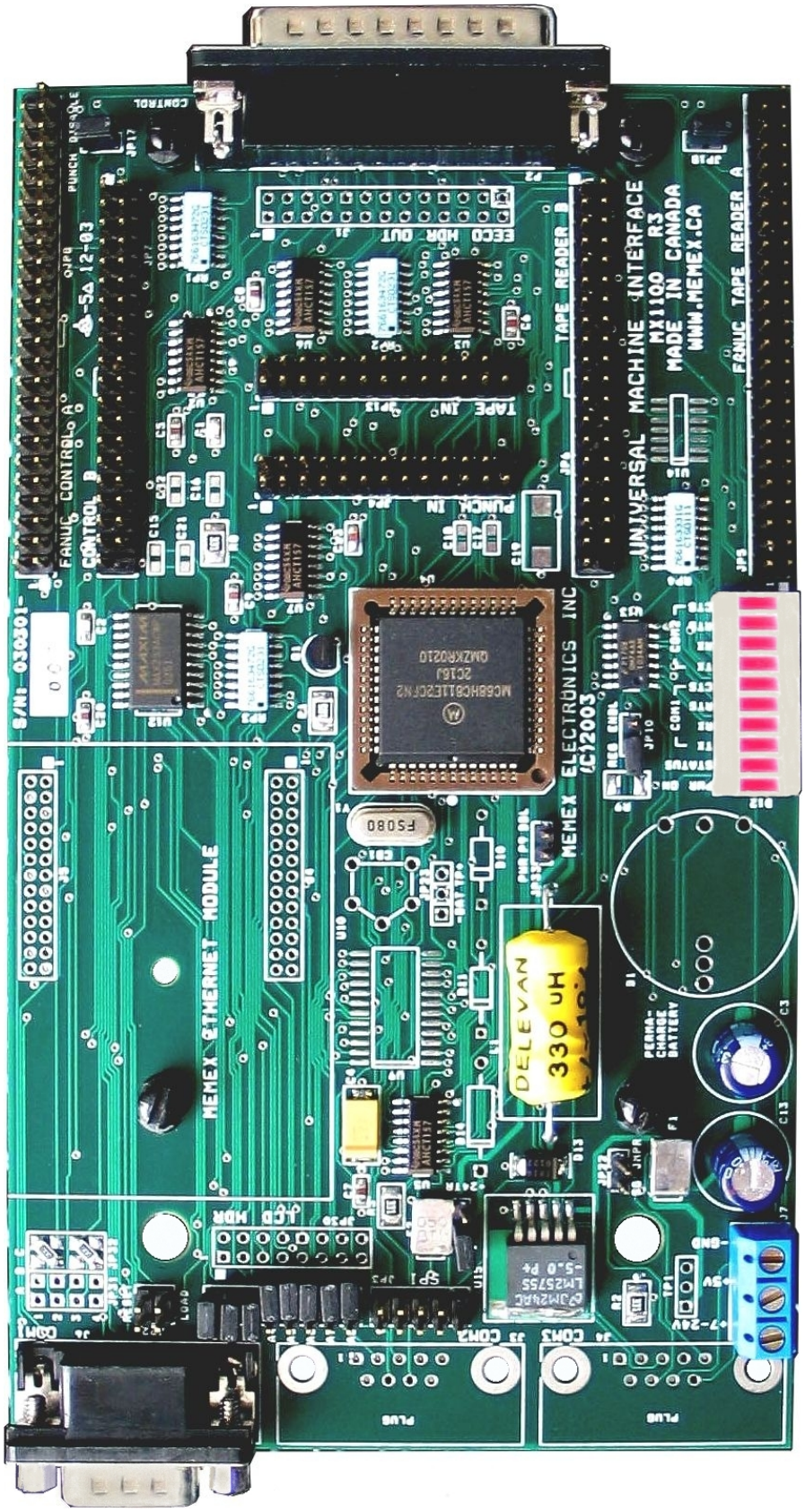
UNIVERSAL MACHINE INTERFACE
MX1100 R3
MADE IN CANADA
WWW.MEMEX.CA
FANUC TAPE READER A
TAPE READER B
ECCO HDR OUT
TAPE IN
PUNCH IN
FANUC CONTROL A
CONTROL B
MEMEX ELECTRONICS INC
MEMEX ETHERNET MODULE
DELEVAN
330 uH
PERMA-CHARGE BATTERY
LCD HDR
PLUG
PLUG

Introduction

Thank you for purchasing the Mx1100 UMI (Universal Machine Interface) BTR. At Memex we invest a great deal of effort in the design, manufacture and testing of each unit we build, and back it with a three-year limited warranty. We are confident you will find the Mx1100 an important component of your shop floor communications system.

About this Manual

This manual explains how to install and operate the Mx1100, and consists of the following sections:

Installation Instructions explains how to install the Mx1100 UMI BTR interface board.

Reference contains a troubleshooting section, notes area and contact information for customer service and technical support.

Appendix A, Configuration & Settings provides information for software (DNC) configuration, BTR jumper settings and serial cable configuration ("pin-out") charts.

Appendix B, ASCII Table lists ASCII values in both Decimal and Hex formats, their corresponding symbol, and keyboard key where applicable. This may be helpful in configuring DNC software in some cases.

The History of the BTR

The "Behind the Tape Reader" board, or BTR as it is commonly called, is an electronic signal processor designed to emulate the function of a paper Tape Reader and provide an RS232 serial port as an alternate method of data entry to an NC or CNC control. RS232 is an international standard for electronic communications, and is a faster and more reliable means of data input than using punch tape or Manual Data Input (MDI). Originally, the only one way that a part program (the "G-code") could be entered into a machine tool was through MDI mode, which allowed the program to be input using a keypad at the control. The MDI process was fine for small programs, but it was time consuming and error prone for longer programs. It took time to set up and to prove the MDI code before operation could commence. Machine flexibility was low, since each new program required time to input. With all the wasted time and lack of flexibility, it was not very long before someone invented an alternate form of control input, the paper Tape Reader.

The paper Tape Reader provided a faster, more reliable form of data input to the numerical control. However, these Tape Readers were mechanical in nature, and required regular maintenance and care to perform properly. Tape Readers allowed data and programs that were punched out on a paper tape to be read in by the control at a rate of approximately 300 to 400 characters per second. A few problems inherent in the Tape Reader are: it has limited ability to accept commands and inform the operator of problems and status; it is prone to mechanical problems; it requires cleaning, lubrication and other maintenance; it has a limited capacity of 1000 feet (305 metres) of tape. It was commonly

suggested that a busy shop keep a spare reader in inventory in preparation for the time when one broke down.

The process of punching data tapes (whether paper, Mylar or metal) was expensive, time-consuming and brought up storage concerns. Because of the absolute nature of a punched tape, the process had to be redone for every program revision. The programmer and operator had to work closely together to keep the tape accurate and up to date. Old tapes had to be filed or destroyed and the latest version had to be carefully marked and stored. Finally, the tape itself had to be handled with care since it was prone to damage.

Later machine controls had a new mode of operation that allowed their Tape Reader's "endless" spool of tape to surmount memory constraints. Originating on Numerical Controls (NC) that had no memory, Direct Numeric Control (DNC) allowed execution of a program while it was being read. This "drip-feed" method meant that the program was limited in size only by the length of tape used. This type of operation was very much appreciated later on with the advent of Computerized Numeric Controls (CNC).
With true onboard memory the CNC had much greater capabilities and inevitably programs got longer and the need for more memory grew. With control memory being expensive and limited, DNC has remained the only way some modern manufacturers can operate. Tape Readers are still commonplace on modern controls today. However, thanks to serial DNC capabilities, many shops use Tape Readers for backup purposes only.

The modern equivalent of a Tape Reader is the BTR interface board, which emulates paper Tape Readers. The Mx1100 UMI BTR is a microcontroller-based interface board that allows communications with a machine control for the purposes of loading programs into memory or running DNC. BTRs generally connect to a computer and permit a programmer to send a complete, formatted program to the machine control. The machine then loads the program as if from tape, either to memory for later execution, or for immediate block-by-block execution (DNC). Because the Mx1100 UMI BTR emulates the Tape Reader, the control really has no way of knowing that the source of the program is a computer port instead of a tape.

The Mx1100 UMI BTR eliminates punching of tape, has no moving parts, can handle transfer speeds that are 20 times that of a Tape Reader, uses the programmed (source) file, is less expensive than a Tape Reader, allows the Tape Reader to still be used, supports the use of the control's punch capability, and does not require maintenance. It's no wonder that the BTR, in combination with DNC software, has become the preferred alternative to using the Tape Reader and (in many cases) to upgrading CNC memory.

While the Memex BTR gives the machine control the ability to receive programs from a PC, it has nothing to do with the specifics of what is being sent to the control. DNC software, or at the very least some form of serial communications software, is responsible for transmitting the data to the control, and the control expects that data to be in a specific format. The part program must be formatted just as it would be for punching to tape, and the DNC software must be configured to send it as if it were a tape. The BTR acts only as a gateway or port to the control. The required program format is usually described in the control's Operations Manual. Please consult the manual for information on how to configure the part code programs for the control. Should you have any questions concerning BTRs, you are welcome to call us any time. See page 12 or back cover for contact information.

Installation Instructions

Unpacking the Mx1100 UMI BTR

Package Contents

- 1 x Memex Mx1100 UMI Serial BTR..... Supplied
- 1 x Sanyo Interface Cable..... Supplied
- 1 x BTR / Tape Mode Switch..... Supplied
- 1 x Installation & User's Manual..... Supplied

Optional Items

- Facit 4070 Punch Port Interface Cable…..... Optional
  (SKU 5120: Punch Cable for Meldas CNC only)
- Serial Interface Cable (PC – BTR)..... Optional
- Serial Transfer (DNC) Software……..... Optional

Before You Begin

Please read all instructions before proceeding. We recommended first making a temporary installation, becoming familiarized with the components and orientation of the assembly, testing the functionality, and then making the installation permanent by mounting the BTR and routing and securing the cables where they are out of harm's way.

Installing the Mx1100 UMI BTR

General

The Memex Mx1100 UMI BTR installation procedure is straightforward and relatively easy to complete – connect the BTR to the CNC where the Tape Reader was connected, optionally connect the Tape Reader to the BTR, and mount the BTR on the inside of the Tape Reader door. All the hardware and accessories are provided. All that's needed are some basic skills and hand tools. Estimated time required: 45 minutes.

1. **Prepare the site.**
   Ensure that the Tape Reader and control are working properly before beginning the installation. When ready, turn OFF all power to the control, machine and computer system.

2. **Access the Tape Reader.**
   Locate the panel on the control that has the Tape Reader mounted on it. Open this door to gain access to the back of the Reader.

3. **Disconnect the Tape Reader.**
   Locate the 40-pin cable connector labelled J0. It can be found on the circuit board labelled A7-1-200 on the back of the Tape Reader. A 40-conductor ribbon cable connects this connector to the CNC. *Note which side of this connector the cable's red stripe goes on*. Disconnect this cable from J0.

4. **Connect the BTR.**
   Connect the cable disconnected in Step 3 to the BTR's 40-pin JP7 connector near top right* (labelled "CONTROL B"), without twisting the cable. Make sure the cable's red stripe is on the right, where Pin 1 is marked with a white square *(see diagram, page 7)*. This connects the BTR's Sanyo control port to the control.

Caution

It is ***very important*** that the cables are installed properly and with the correct orientation. If one of the cables is plugged in upside down, severe damage ***will*** occur to the BTR, to the Tape Reader and to the control's Master Board.

5. **Mount the BTR.**
   Locate a safe spot on the back of the door and magnetically mount the Mx1100 UMI BTR.

6. **Option: Connect the Tape Reader to the BTR.**
   If you wish to enable the paper Tape Reader, take the new 40-conductor ribbon cable and plug it onto the JP6 connector (labelled "TAPE READER B") near the bottom right of the BTR.* *The red side of the cable goes on pin 1 of the connector (see diagram on page 7).* Plug the other end of the cable onto the J0 connector on the Sanyo Tape Reader card from which the cable was removed in Step 3 – *ensuring the red wire on the ribbon cable goes on pin 1 of the connector, as noted in Step 3.*

7. **Option: BTR/Tape Mode Switch.**
   This switch is only needed if you want to enable a paper Tape Reader that does not have reels. If the Tape Reader is a Model 1400 (has reels), this switch isn't required, since the Reader's switch will control the BTR's mode. And if enabling the Tape Reader isn't necessary, this switch isn't required regardless of what type of Reader exists.
   This switch allows the BTR to be toggled back and forth between Tape mode (to use the Tape Reader) and BTR mode (to send files from the computer). It plugs onto JP3, labelled SPI, on the left side of the BTR just behind the COM2 port. To mount the switch to the CNC permanently, drill a ¼" hole in the cabinet and bolt it in place.

   Note:
   A second use of the Mode Switch is as a manual reset for the BTR. The BTR has a 78-byte input buffer (or larger, depending on UMI options installed) that will contain a small portion of the incoming g-code program until it finishes passing through. In the event of an abnormal interruption of data flow (machine error, etc.) and the g-code program must be stopped and resent, the BTR buffer should be cleared so the control doesn't get that last piece of the previous send before the start of the new send. If you have connected a Tape Reader with reels, flicking its mode switch will reset the BTR. If not, you can use the BTR/Tape Mode switch as a reset switch.

Note:

* All references made to objects located on the BTR are made with respect to the BTR being oriented horizontally so that the "Universal Machine Interface" label can be read at the bottom right. *See diagram, page 7.*

8. **Option: Punch Cable.**
   To punch part programs, parameters, etc. from the control to the computer, connect the control's punch port to the BTR. Locate the punch port on your control. It's usually a 25-pin D-sub (db25) connector. Plug the 25-pin end of the Facit punch port interface cable into this port. (**Note:** If the control is a Meldas it is more likely to be a blue rectangular 34-pin connector. In this case a custom Meldas punch cable, available

from Memex, is required.) Plug the 26-pin end onto the BTR's JP4 connector, labelled "PUNCH IN". *The red stripe goes on the side with Pin 1 (see diagram on page 7)*. Remove the JP17 jumper (labelled "PUNCH DISABLE") in the upper right corner of the BTR.

9. **Configure the BTR.**
   Set the jumpers on the BTR to configure the communications parameters required for your DNC system. The option jumpers, listed on page 18, include the following:

   A1 and **A2** set the **Baud rate**. Typically 9600 baud (both jumpers ON) is used unless your cable doesn't support that rate reliably. The RS232 specification supports 9600 Baud with a cable length up to 50 feet (15 metres), but it is often possible to exceed that. It's important to use cable specifically designed for RS232 serial data, 22 AWG, twisted pair, stranded wire (not solid), shielded. Low capacitance (a rating of 11 to 15 pF per foot) is best. In any case, if you have a long cable run or are experiencing unreliable data transmission, try lowering the Baud rate. **NOTE:** *CAT5 Ethernet cable is <u>not</u> suitable for use as serial data cable.*

   A3 OFF adds **hardware** (RTS/CTS) **handshaking**. A3 ON is **software** (Xon/Xoff) only. Generally it is preferable to use both, which means setting A3 OFF and making sure your cable supports hardware handshaking (*see Note 6 on page 10*).

   A4 OFF uses the standard **Xoff** character, **$13** Hex. Set A4 ON if your DNC or terminal software uses **$93** Hex for Xoff.

   A5 OFF uses the standard Xon/Xoff handshaking method (a **single Xoff**). Setting A5 ON sends a **continuous** stream of Xoff back to the computer until the next Xon. This enables the BTR to be used with some terminal programs that were intended for use with a modem, such as Procomm ™ although we highly recommend the use of proper DNC software.

   A6 OFF will **echo** incoming data back to the PC for diagnostic purposes. Set A6 ON for normal use.

   A7 OFF is **ISO** data and ON converts incoming data to **EIA** format for controls that require EIA data.

   A8 overrides the Tape Reader's selection of **BTR or Tape mode**. If the Tape Reader wasn't reconnected to the BTR, or if the Tape Reader isn't intended to be used often and the BTR will usually in Tape mode, set A8 ON. (Remember to remove it when a tape needs to be read.)

SG JMPR ON disables COM1 signal ground **surge suppression**.

PWR P9 DBL ON activates power on COM1's pin 9, for use with devices such as buffers or modems (*see note on page 19*).

+24TR, +5TR and **REG ENBL** select BTR input voltage and should be factory set to work with the Tape Reader for which it is intended. If its power source needs to be changed, please refer to note 1 on page 8 for settings.

10. Connect to the Computer.

Connect a serial cable from the 9-pin COM1 on the BTR to the computer's serial port (s*ee page 19 for cable configurations)*.

11. Test the Functionality.

Refer to "Operating the Mx1100 UMI BTR" (page 6), and if necessary, "Reference" (page 8).

12. Mark and Reroute the Cables.

Mark the connectors and cables to ensure proper reconnection. Disconnect the cables and route them neatly where they won't be pinched, etc. Mount the BTR in a safe location inside the control cabinet. Carefully reattach and secure all cables with cable ties.

BTR Configuration for Sanyo Denki Tape Reader

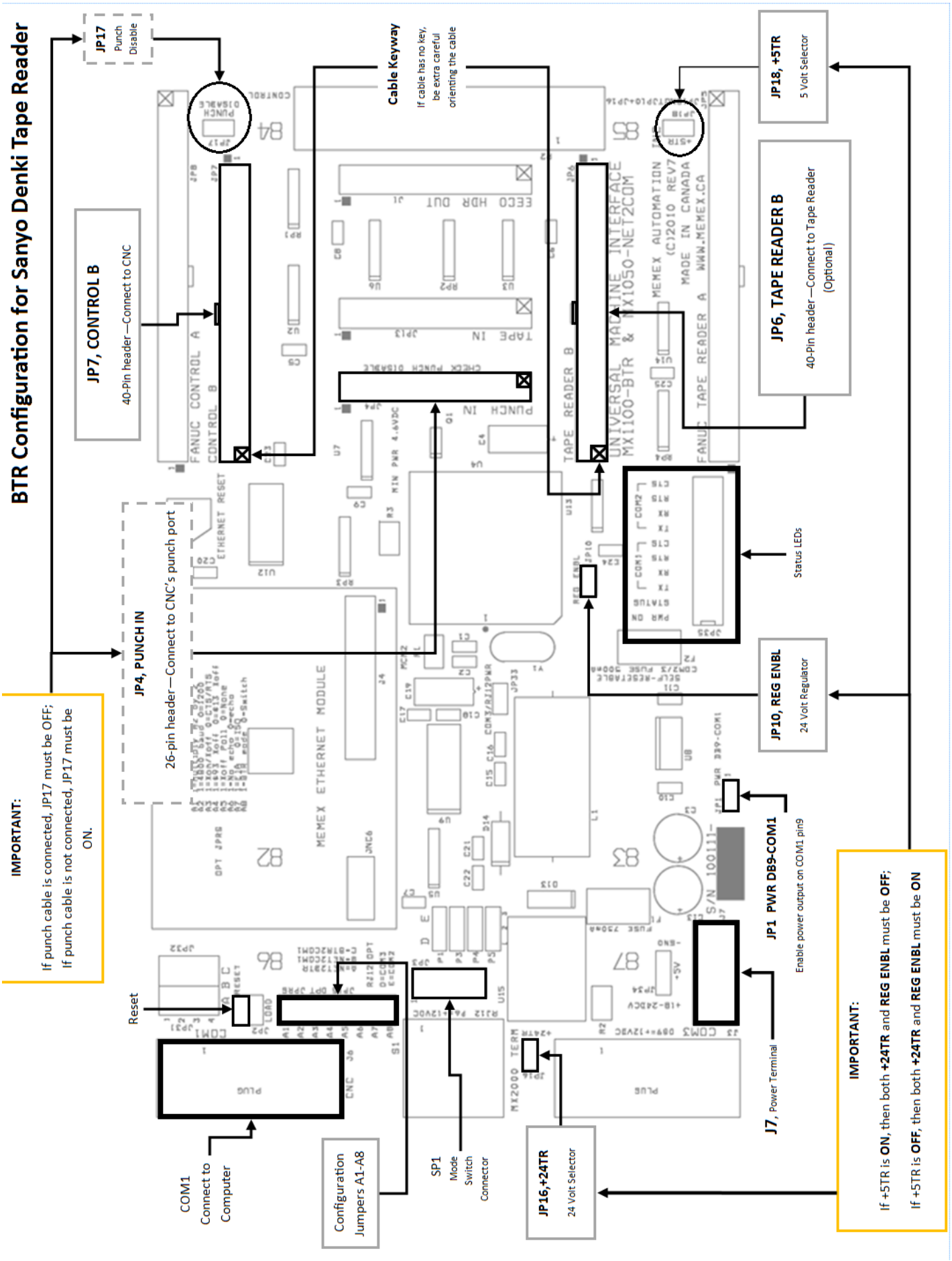

Reference

This chapter contains troubleshooting hints and information about Memex Technical Support and Service.

General Troubleshooting

The Mx1100 UMI BTR is designed to install easily and quickly. However, if experiencing difficulty in the procedures, please check the following to isolate and resolve the problem.

1. **Check that the "PWR ON" LED on the BTR (leftmost LED in the LED block at bottom centre*) is on and bright.**
   The RTS LED for COM1 should also be on. If there is no power to the BTR, ensure that the cables from the Control (and from the Tape Reader if connected) are oriented properly and are well secured. Also, check that *one* of the following is true:
   a) The "+5TR" jumper (JP18 at bottom right) is ON and the "+24TR" jumper (JP16 at middle left) and "REG ENBL" (JP10 near middle bottom) are OFF; *-or-*
   b) The "+5TR" jumper (JP18) is OFF and the "+24TR" jumper (JP16) and "REG ENBL" (JP10) are ON
   In case "a" above, the BTR is sourcing 5 volts from the CNC; in case "b" it is sourcing 24 volts and reducing it to 5 volts.
   Typically 5V (setting "a") is used with a Fanuc control.

   Note: The default power source setting is "a" above, 5 volts. However, in some CNCs the 5-volt supply has faded to below the threshold that will power the BTR. If the BTR won't power on, try using 24 volts by setting the jumpers as in "b" above.

Note:

* All references made to objects located on the BTR are made with respect to the BTR being oriented horizontally so that the "Universal Machine Interface" label can be read at the bottom right. *See diagram, page 7*.

Layout of the Mx1100 UMI Serial BTR

2. **Alternate source of power.**
   If the PWR LED still does not come on, carefully find a source of power on the control between 7 to 24VDC and wire it in to the screw-down terminal block J17 at the lower left corner of the BTR. *When power is brought in through the terminal block, the jumpers must be set as in "b" above*.

3. **Check that the BTR is working properly.**
   When the control is powered up or reset, the BTR's STATUS LED (2nd LED in LED block at middle bottom) should blink. One blink indicates that the Mx1100 is in BTR Mode. This means that it is ready to receive information through the serial port and to send it to the control. Two blinks indicate that the Mx1100 is in TAPE Mode. This means that it is ready to pass information through the BTR from the Tape Reader to the Control. (The leftmost TX LED will also blink, as the BTR sends out a status message on its COM1 port during power up.) With most Tape Readers, turning the Tape Reader on/off or switching it between Load and Release will switch the BTR between modes.

4. **Check the status message.**
   When the BTR is powered on or reset, it sends a short message on its COM1 port, indicating which mode it's in. The STATUS and first TX LEDs will blink during output. If the computer is properly connected, and your DNC software is configured to match the BTR communication settings and is set to receive a file, it should be possible to capture and read the status message. If the message is clearly readable then the BTR's communications are good, and so is the cable, the settings, the computer and the DNC software.

   NOTE: Some versions of the BTR require the A6 jumber to be off (echo enabled) for the status message to be sent back to the PC on Power On.

5. **The Status and Tx LEDs flash but there is no status message.**
   First the computer has to be watching for the status message with DNC software, or at least with a terminal program or utility. After installing your software, verify that the correct communication parameters are set and check that the correct computer COM port is being used. Check that the BAUD RATE is properly set and matches the baud rate on the BTR (check option jumpers A1 and A2 – *see pg. 17*) and that the STOP BITS are set to 1. Make sure that the cable connecting the BTR to the computer is a properly configured RS-232 serial data cable and that it is properly connected (*see Step 6 below*). Also verify that the PC's COM port is functioning properly.

6. **Check the serial data cable and handshaking settings.**
   First, make sure the cable matches the appropriate diagram under "Mx1100 UMI BTR Cable Configurations" (page 19).

   Second, make sure the cable, BTR settings and software settings match with regard to handshaking method. If using *software* handshaking (Xon/Xoff) only (*see table A on page 19*), make sure that BTR Jumper A3 is ON and your DNC software is set for Xon/Xoff handshaking only. If using *hardware* handshaking (*see table B on page 19*), make sure that BTR Jumper A3 is OFF, your DNC software is set for RTS/CTS *and*

Xon/Xoff handshaking, and the cable supports it by having the wires for RTS and CTS connected for a total of five wires connected at each end. (Note: Software handshaking can be used with a hardware handshaking cable, but *not* the other way around.)

Third, make sure every wire connection at each end of the cable is solid, there are no breaks in the wires, no wire insulation is pulled back far enough to allow bare wire to touch another wire or any other metal parts, and no solder or debris is touching more than one pin. If everything looks good at the ends, it may be necessary to use a multimeter to determine whether there is a break or a short in the wires somewhere along the length of the cable.
If a hardware handshaking cable is being used, the leftmost CTS LED (in the STATUS LED bank at bottom centre of the BTR) will light up when a properly configured cable is connected between the BTR and a computer and both are powered on. The leftmost RTS LED will always be on, indicating that the BTR is active and the port is ready. Regardless of which type of handshaking is being used, the leftmost RX LED will blink when data is sent to the BTR, and the leftmost TX LED will blink during any Xon/Xoff handshaking that might occur during the send.

7. **The whole file sends before pressing Cycle Start.**
The most common cause of this is incorrect handshaking settings. Refer to Note 6 above. In addition, some terminal programs expect the XOFF character, normally Hex 13, to include even parity, making it Hex 93. Try setting jumper A4 ON (*see page 18*).

8. **A CNC error occurs shortly after pressing "Cycle Start".**
Try removing the CR (carriage return) characters from the program. Some controls only accept "pure" ISO or EIA code, which does not contain CR characters. Also try changing BTR jumper A7 in case it's a matter of ISO / EIA format mismatch.

9. **The control generates a Tape Vertical (TV) alarm.**
Tape Vertical checking was a way that controls verified the accuracy of the program code they read in through the Tape Reader. It is usually an option and does not apply when you are using a BTR. Turn this option off in the control's parameters.

10. **The control generates a Tape Horizontal (TH) alarm.**
Tape Horizontal is equivalent to Even parity. Use Even parity when sending the programs from the terminal or PC. Also see Notes 7 and 8 above – jumper A4 and/or A7 may resolve this.

11. **The Power LED lights but the STATUS LED doesn't flash.**
Check the supply voltage to the BTR. If using a 5VDC supply and it is less than 4.6VDC, the BTR may actually be protecting itself from under-voltage. Find a better 5V supply, or switch to 24V (see Note 1 "b") or use the screw-down terminal in the

bottom left corner with a supply of 7 to 24VDC. Always be sure to set up the power jumpers correctly (see Notes 1 and 2).

12. **Other machine errors**
    Ensure that the proper tape codes are being used at the beginning and/or end of the program. Some machines require a “%” (percent sign) as the first and/or last character in the program. Check the CNC Operator’s Manual for any termination characters that may be required.

13. **What if the BTR “Locks Up”?**
    Near the upper left corner of the BTR are the four pins labelled RESET and LOAD. Of those four pins, the top two are the reset pins. Momentarily shorting the two RESET pins by touching them with a metal object such as a screwdriver or coin (while the power is on) will reset the BTR and make the STATUS LED flash. This action is the equivalent of pressing the reset button on a PC. This should not have to be done on a regular basis, but, as with anything electronic, lockup can happen.

Memex Technical Support & Service

In case of technical difficulty with the Mx1100 UMI BTR, be sure to review the troubleshooting section of this manual prior to calling for technical support. If the issue cannot be resolved after reading through the troubleshooting section, please contact Memex Automation Technical Support at **1-905-635-3042**. Page 13 of this manual may be used to record technical information, service advice, etc. as needed.

If you have any other questions or concerns, need answers to technical questions, or need information about Memex products and/or services, please contact your local Memex dealer, or contact Memex Automation:

Memex Automation Inc.
200 – 3425 Harvester Rd.,
Burlington, Ontario L7N 3N1
Canada

Phone: 905-635-3040
Fax: 905-631-9640
Web: www.memex.ca
Email: sales@memex.ca
support@memex.ca

Notes

Glossary

ANSI American National Standards Institute. The official US agency and voting representative for ISO. This institute develops information exchange standards above 50 Mbps.

ASCII American Standard Code for Informational Interchange. A seven bit alphanumeric code used extensively in data communications. A parity bit is often added to the seven-bit code for error detection.

See Appendix B, page 20 for a table of ACSII values.

ASYNCHRONOUS TRANSMISSION The transmission of characters separated by time intervals that vary in length, usually in accordance with the key entries of a terminal operator. Start and stop bits are used to identify (frame) the beginning and end of the asynchronously transmitted character.

BAUD RATE The rate at which a signal is changed or modulated. Refers to the number of bits transmitted per second.

BTR Behind the Tape Reader. An electronic input device that emulates a Tape Reader's signals on a machine control, usually converting serial communications to parallel Tape Reader signals.

CNC Computerized Numerical Control. An industrial computer that is used to control the movement of a machine. A CNC usually uses programs coded with G-codes and M-codes.

CONTROL Refers to a Computerized Numerical Control (CNC).

CTS Clear To Send. One of the control lines used in RS232 communication. Found on pin 4 or 5 on a DB25 and pin 7 or 8 on a DB9 depending whether the port is DTE or DCE.

DCE Data Communication Equipment. Typically a modem or data set used to interface a terminal or computer to the telephone lines.

DNC Direct/Distributed Numeric Control. A means of communicating or "drip feeding" a program to a CNC through a Tape Reader or serial interface. The program code is immediately executed, block by block, as it is read by the control.

DTE Data Terminal Equipment. In data communications, it is an end user or termination circuit, typically a terminal or computer.

ECHO A reflected signal. Information is sent back to the transmitter from the receiver, often for verification purposes.

EIA Electronic Industries Alliance. A United States organization of manufacturers that establishes and recommends industrial standards. They developed the EIA standard code used in early NC and CNC communications. Also refers to a form of 7 bit ASCII with Odd parity, used largely on CNCs.

FRAMING The procedure used to identify the beginning and end of a group of data bits.

FRAMING ERROR An error that occurs when a receiver loses synchronism to the incoming data.

G CODE The instructions used to dictate the movement of a machine. A list of these codes is commonly called a "part program".

HANDSHAKING A process that regulates the flow of data between two devices. Also called "flow control".

HARDWARE HANDSHAKING Handshaking (flow control) by use of the RTS and CTS control lines on an RS232 serial interface.

ISO International Standards Organization. One of the world's largest standards organizations. Also refers to a form of 7 bit ASCII with data encryption and Even parity, used largely on CNCs.

LOCAL ECHO Refers to when a terminal is configured to internally route its transmitted character around to its receiver section for display.

MODEM A contraction of modulator/demodulator. The modem converts a computer's digital bit stream into an analog signal suitable for telephone lines and vice versa.

PAPER TAPE A media of part program storage. Holes were punched in a one-inch paper tape to represent G codes. These tapes were then read through a Tape Reader to be loaded into machine control memory.

PARITY An error detection method whereby a single bit is added to a group of bits to make the total number of 1 bits either even or odd (depending on the type of parity; even or odd).

PART PROGRAM A list of G codes that control the movement of the machine. May be typed into the machine control or produced as a computer text file and transmitted to the control.

PARITY ERROR Indicates that the total number of 1 bits in a received character does not agree with the type of parity expected.

RS232-C An asynchronous serial interface standard that specifies an electrical, functional, and mechanical interface specification between data communication devices.

RTS Request To Send. One of the control lines used in RS232 communication. Found on pin 4 or 5 on a DB25 and pin 7 or 8 on a DB9 connector depending on whether the port is DCE or DTE.

RTS/CTS Hardware handshaking (flow control) using the RTS and CTS control lines.

Rx Receive Data. Refers to the input for the data signal.

SG Signal Ground. Refers to the ground for the data signal. Not the same as the cable's shield ground or a device's frame ground.

START BIT The first bit used to frame an asynchronously transmitted character. Its logic level is a 0 (space).

STOP BIT The last bit used to frame an asynchronously transmitted character. Its logic level is a 1 (mark).

SYNCHRONOUS TRANSMISSION High-speed communication whereby data characters are sent in direct succession to each other without the use of Start and Stop bits.

TAPE READER An input device used on CNC Machines and other industrial equipment. Used to read coded data on a punched tape. Older Tape Readers were a mechanical device, whereas newer ones use optical devices that sense light passing through the holes in the tape.

TERMINAL An input/output device used by an operator to communicate with a host computer. It consists of a keyboard and a display to monitor alphanumeric characters entered at the keyboard or received from a remote device.

TERMINAL SOFTWARE Computer software that enables a computer to act as a terminal, usually used with modems. Can be used to exchange data over a serial cable between two computers or a computer and a machine control, but does not provide the level of flow control necessary to prevent dangerous miscommunications with a machine control. Specific purpose DNC software is highly preferable.

TIME-OUT ERROR An error that occurs when a device fails to respond to a message within an expected period of time.

Tx Transmit Data. Refers to the output for the data signal.

XOFF Transmit Off. A device control character (DC3 or $13 hex) used to control the flow of data between two devices. XOFF is used together with XON as a handshake.

XON Transmit On. A device control character (DC1 or $11 hex) used to control the flow of data between two devices. XON is used together with XOFF as a handshake.

XON/XOFF Software handshaking using the XON and XOFF control characters.

Appendix A: Configuration & Settings

Mx1100 UMI BTR Serial Configuration

Baud Rate.....	9600 (default; set by jumpers A1 & A2)
Parity.....	Even
Data Bits.....	7
Stop Bits.....	1
Handshake.....	See note 6, page 10

If using terminal software, these settings may also apply:

Duplex.....	FULL
ASCII transfer options….	Strip the High Bit = ON

Option Jumpers on the Mx1100 UMI Serial BTR

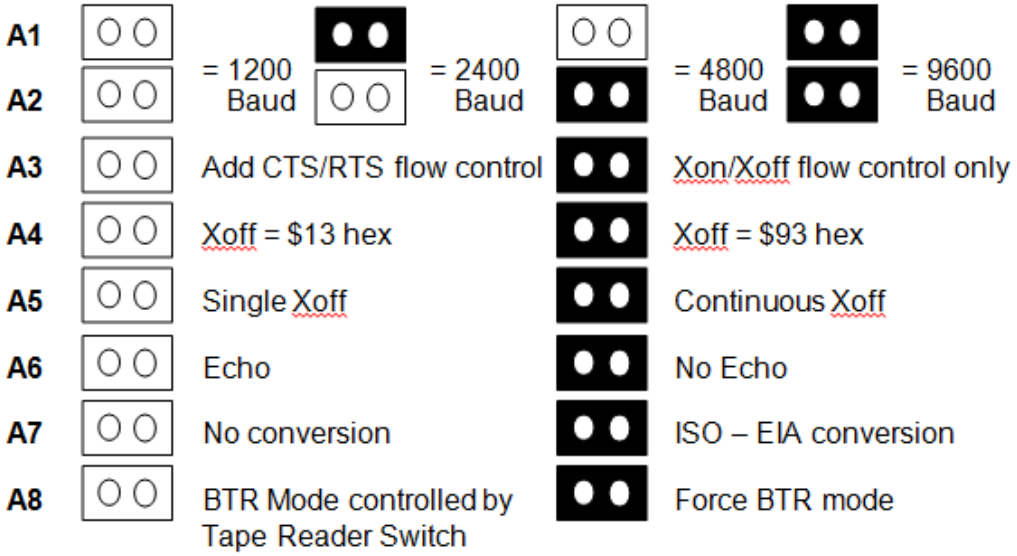

+24TR	**JP16**	Enable 24V power from Tape Reader
+5TR	**JP18**	Enable 5V power from Tape Reader
REG ENBL	**JP10**	Enable 5V Power Regulator
Punch Disable	**JP17**	Use if Punch Port not connected
SG JMPR	**JP22**	Disable COM1 signal ground surge suppression
PWR P9 DBL	**JP23**	Enable power output on COM1 pin 9 **

NOTE:

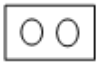
= NO Jumper

= Jumper ON

Mx1100 9-pin RS232-C Serial Port Pin Functions

Pin 2.....Receive Data
Pin 3.....Transmit Data
Pin 4.....DTR
Pin 5.....Signal Ground
Pin 7.....RTS
Pin 8.....CTS
Pin 9.....Power Output **

*Note:*** Memex has enabled Pin 9 to be a power source for external devices. It is enabled by jumpering JP33, "PWR P9 DBL" *(see diagram, page 7)*. The output voltage depends how the BTR is being powered: 5V from CNC or Tape Reader = no output; 24V from CNC or TR = 24V output; input from screw-down terminal J7 = same voltage output on pin 9.

Mx1100 UMI Serial BTR Cable Configurations

A – Software Handshaking Only

Computer 25-pin Female	*Mx1100 BTR* 9-pin Female
Tx – 2	2 – Rx
Rx – 3	3 – Tx
SG – 7	5 – SG
FG – 1	No Connection
9-pin Female	9-pin Female
Tx – 3	2 – Rx
Rx – 2	3 – Tx
SG – 5	5 – SG
FG – (D-shell)	No Connection

B - Hardware Handshaking Enabled

Computer 25-pin Female	*Mx1100 BTR* 9-pin Female
Tx – 2	2 – Rx
Rx – 3	3 – Tx
RTS – 4	8 – CTS
CTS – 5	7 – RTS
SG – 7	5 – SG
FG – 1	No Connection
9-pin Female	9-pin Female
Tx – 3	2 – Rx
Rx – 2	3 – Tx
RTS – 7	8 – CTS
CTS – 8	7 – RTS
SG – 5	5 – SG
FG – (D-shell)	No Connection

NOTE: The cable's shield should be **grounded at one end** of the cable and not at the other, so it does provide a noise drain but does not form a ground loop. On 25-pin connectors, Pin 1 is a Frame Ground. On 9-pin connectors, there is no Frame Ground so the D-shell or other ground may be used (but not the Signal Ground).

Appendix B: ASCII Table

DEC	HEX	SYM	KEY	DEC	HEX	SYM	DEC	HEX	SYM
0	0	NUL	ctrl @	43	2B	+	86	56	V
1	1	SOH	ctrl A	44	2C	,	87	57	W
2	2	STX	ctrl B	45	2D	-	88	58	X
3	3	ETX	ctrl C	46	2E	.	89	59	Y
4	4	EOT	ctrl D	47	2F	/	90	5A	Z
5	5	ENQ	ctrl E	48	30	0	91	5B	[
6	6	ACK	ctrl F	49	31	1	92	5C	\
7	7	BEL	ctrl G	50	32	2	93	5D	]
8	8	BS	ctrl H	51	33	3	94	5E	^
9	9	HT	ctrl I	52	34	4	95	5F	_
10	A	LF	ctrl J	53	35	5	96	60	`
11	B	VT	ctrl K	54	36	6	97	61	a
12	C	FF	ctrl L	55	37	7	98	62	b
13	D	CR	ctrl M	56	38	8	99	63	c
14	E	SO	ctrl N	57	39	9	100	64	d
15	F	SI	ctrl O	58	3A	:	101	65	e
16	10	DLE	ctrl P	59	3B	;	102	66	f
17	11	DC1	ctrl Q	60	3C	<	103	67	g
18	12	DC2	ctrl R	61	3D	=	104	68	h
19	13	DC3	ctrl S	62	3E	>	105	69	i
20	14	DC4	ctrl T	63	3F	?	106	6A	j
21	15	NAK	ctrl U	64	40	@	107	6B	k
22	16	SYN	ctrl V	65	41	A	108	6C	l
23	17	ETB	ctrl W	66	42	B	109	6D	m
24	18	CAN	ctrl X	67	43	C	110	6E	n
25	19	EM	ctrl Y	68	44	D	111	6F	o
26	1A	SUB	ctrl Z	69	45	E	112	70	p
27	1B	ESC	ctrl [	70	46	F	113	71	q
28	1C	FS	ctrl \	71	47	G	114	72	r
29	1D	GS	ctrl]	72	48	H	115	73	s
30	1E	RS	ctrl ^	73	49	I	116	74	t
31	1F	US	ctrl _	74	4A	J	117	75	u
32	20	SP		75	4B	K	118	76	v
33	21	!		76	4C	L	119	77	w
34	22	“		77	4D	M	120	78	x
35	23	#		78	4E	N	121	79	y
36	24	$		79	4F	O	122	7A	z
37	25	%		80	50	P	123	7B	{
38	26	&		81	51	Q	124	7C	|
39	27	‘		82	52	R	125	7D	}
40	28	(		83	53	S	126	7E	~
41	29	)		84	54	T	127	7F	DEL
42	2A	*		85	55	U			

Memex Automation Inc.
200 – 3425 Harvester Rd.
Burlington, Ontario
Canada L7N 3N1
Phone: 905-635-3040 Fax: 905-631-9640
www.memex.ca

Sales: (905) 635-3043
Support: (905) 635-3041

Thank you for choosing Memex for your Manufacturing Connectivity Solutions